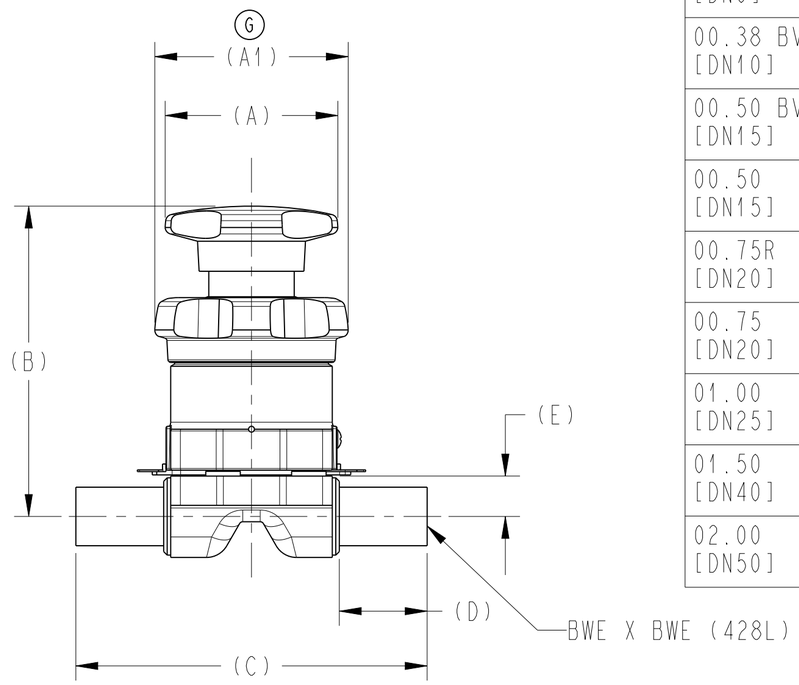

VALVE SIZE	NOTE	(A)	(A1)	(B)	(C)	(C1)	(C2)	(D)	(E)	(F)	(H)	DRAIN ANGLE
00.25 BV [DN6]	1	(1.45) [36,8]	(2.20) [55,9]	(3.36) [85,3]	(3.50) [88,9]	(2.50) [63,5]	(3.00) [76,2]	(0.95) [24,1]	(0.38) [9,7]	(3.17) [80,4]	(2.30) [58,5]	(32°)
00.38 BV [DN10]	1	(1.45) [36,8]	(2.20) [55,9]	(3.36) [85,3]	(3.50) [88,9]	(2.50) [63,5]	(3.00) [76,2]	(0.95) [24,1]	(0.38) [9,7]	(3.29) [83,6]	(1.98) [50,3]	(25°)
00.50 BV [DN15]	1	(1.45) [36,8]	(2.20) [55,9]	(3.36) [85,3]	(3.50) [88,9]	(2.50) [63,5]	(3.00) [76,2]	(0.95) [24,1]	(0.38) [9,7]	(3.35) [85,2]	(1.73) [44,0]	(20°)
00.50 [DN15]		(2.05) [52,1]	(2.94) G [74,7]	(4.04) [102,5]	(5.22) [132,6]	(3.50) [88,9]	(4.36) [110,7]	(1.50) [38,1]	(0.49) [12,4]	(3.93) [99,7]	(2.63) [66,9]	(27°)
00.75R [DN20]		(2.05) [52,1]	(2.94) G [74,7]	(4.04) [102,5]	(5.22) [132,6]	(4.00) [101,6]	(4.61) [117,1]	(1.50) [38,1]	(0.49) [12,4]	(4.03) [102,3]	(2.00) [50,9]	(16°)
00.75 [DN20]		(2.95) [74,9]	(3.72) G [94,5]	(5.30) [134,6]	(6.00) [152,4]	(4.00) [101,6]	(5.00) [127,0]	(1.50) [38,1]	(0.69) [17,5]	(4.99) [126,7]	(4.16) [105,7]	(36°)
01.00 [DN25]		(2.95) [74,9]	(3.72) G [94,5]	(5.30) [134,6]	(6.00) [152,4]	(4.50) [114,3]	(5.25) [133,4]	(1.50) [38,1]	(0.69) [17,5]	(5.16) [131,0]	(3.79) [96,2]	(30°)
01.50 [DN40]		(3.89) [98,8]	(5.13) [130,3]	(7.09) [180,1]	(7.08) [179,8]	(5.50) [139,7]	(6.29) [159,8]	(1.50) [38,1]	(0.98) [24,9]	(7.05) [179,0]	(4.61) [117,0]	(25°)
02.00 [DN50]		(3.89) [98,8]	(5.13) [130,3]	(7.69) [195,4]	(7.14) [181,4]	(6.25) [158,8]	(6.70) [170,1]	(1.50) [38,1]	(1.15) [29,2]	(7.72) [196,0]	(4.16) [105,7]	(19°)

NOTES:

1. FOR BIOVIZION USE BW X BW (428)
   TC X TC (419)
   TC X BW (419 X X28)
   BW X TC (428 X X19)

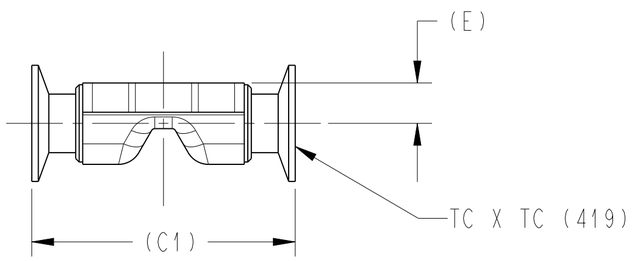

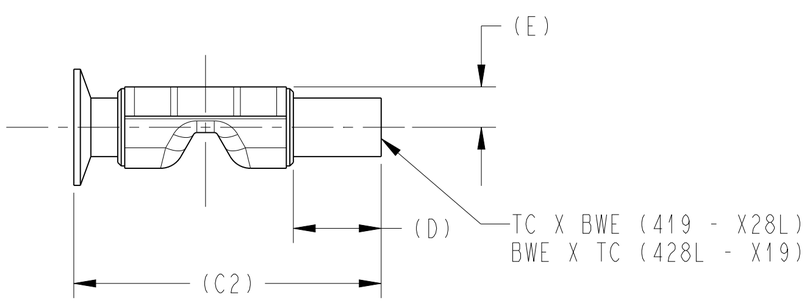

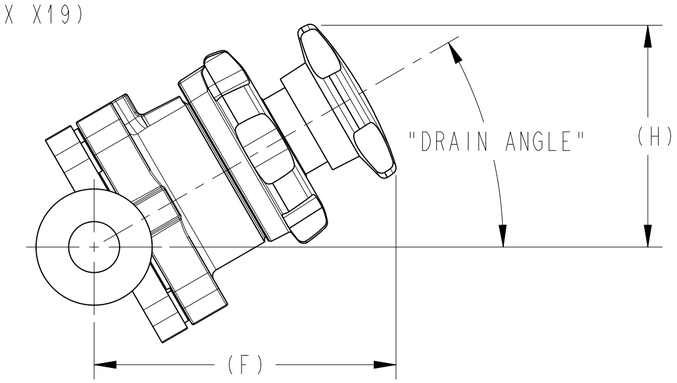

VALVE ON DRAIN ANGLE

UNLESS OTHERWISE SPECIFIED, ALL DIMENSIONS IN BRACKETS [ ] ARE MILLIMETERS.

THIS DOCUMENT IS THE SOLE PROPERTY OF ITT CORPORATION, OR ITS SUBSIDIARY, AND IS PROVIDED SUBJECT TO RETURN. IT IS ISSUED IN STRICT CONFIDENCE AND SHALL NOT BE REPRODUCED, OR COPIED, OR DISCLOSED IN WHOLE OR IN PART, OR USED AS THE BASIS FOR THE MANUFACTURE OR SALES OF APPARATUS OR PARTS TO WHICH THE DOCUMENT RELATES, WITHOUT THE EXPRESS WRITTEN CONSENT OF ITT CORPORATION, OR ITS SUBSIDIARY. THIS LEGEND SHALL BE MARKED ON ANY REPRODUCTION HEREOF, IN WHOLE OR IN PART. ALL RIGHTS TO THE INFORMATION AND DESIGN DISCLOSED HEREIN ARE RESERVED TO ITT CORPORATION, OR ITS SUBSIDIARY.

PURE-FLO ORDER: - ITEM: -
CUSTOMER: -
CUSTOMER PO: -
OTHER INFO: -
-

THIRD ANGLE PROJECTION

UNLESS OTHERWISE SPECIFIED, ALL DIMENSIONS ARE IN INCHES/MM

UNLESS OTHERWISE NOTED

INCH	MM
X = ± 0.06	
.X = ± 0.06	X = ± 1,5
.XX = ± 0.06	.X = ± 1,5
.XXX = ± 0.02	.XX = ± ,5
X/X = ± 1/16	
.X° = ± .5°	.X° = ± .5°
X° = ± 1°	X° = ± 1°

	DATE	BY
DWN	10/12/20	LFV
CHKD	10/12/20	KRP
APVD	10/12/20	TJS

ENVIZION VALVE OUTLINE
BV - 02.00
MANUAL TOPWORKS
-
-

MASTER DWG: A28957/G ECN# 18147

ITT Pure-Flo www.ittpureflo.com

C A28957 SHEET 1 OF 1 REV G

ISSUED BY: - CERT BY:

CD_PF1_C 11/30/10